Cy-1

EGG-TMI-7481
January 1987

PATENT CLEARED

Idaho National Engineering Laboratory

Managed by the U.S. Department of Energy

INFORMAL REPORT

TMI-2 ONCE THROUGH STEAM GENERATOR AUXILIARY FEEDWATER INJECTION RATES

James L. Anderson

EG&G Idaho

Work performed under DOE Contract No. DE-AC07-76ID01570

EGG-TMI-7481

TMI-2 ONCE THROUGH STEAM GENERATOR AUXILIARY FEEDWATER INJECTION RATES

James L. Anderson

Published January 1987

EG&G Idaho, Inc.
Idaho Falls, Idaho 83401

Prepared for the
U.S. Department of Energy
Idaho Operations Office
Under DOE Contract No. DE-AC07-76ID01570

ABSTRACT

Knowledge of primary to secondary heat transfer during the TMI-2 accident is necessary for analysis of the accident thermal-hydraulics and the core damage progression. Unfortunately neither the secondary liquid injection rates nor the steaming rates were recorded during the accident. An analysis has been performed to provide estimates of these rates based upon the changes in the secondary liquid levels. The injection and steaming rates calculated from this analysis are presented in tabular form. The primary to secondary heat transfer rates calculated from the AFW injection and steaming rates are presented graphically, and the integrated rates compared to the core decay energy and the estimated energy flow out of the Pilot Operated Relief Valve (PORV).

SUMMARY

Knowledge of the primary to secondary heat transfer during the TMI-2 accident is necessary for the analysis of the accident thermal-hydraulics and the core damage progression. Unfortunately neither the secondary liquid injection rates nor the steaming rates, required for calculation of the overall heat transfer rates, were recorded during the accident. An analysis has been performed to provide estimates of these rates based upon the changes in the secondary liquid levels. The crux of this analysis is the assumptions that (a) during periods of secondary level decrease there was no Auxiliary Feedwater (AFW) injection in the Once Through Steam Generator (OTSG), with mass loss by steaming from the OTSG; and (b) during periods of level increase resulting from AFW injection, the steaming continued at approximately the same rate as following the cessation of the AFW. Use of these assumptions, in conjunction with known events and timing from the alarm printer, permits the calculation of the AFW injection and steaming rates, and thus the primary to secondary heat transfer rates for both steam generators.

The AFW injection and steaming rates calculated from this analysis are presented in tabular form, and the resulting total secondary mass compared to the secondary mass calculated from the measured liquid levels, with very good comparison. The primary to secondary heat transfer rates calculated from the AFW injection and steaming rates are presented graphically, and the integrated rates compared to the core decay energy and the estimated energy flow out of the Pilot Operated Relief Valve (PORV). The calculated heat transfer rates are recommended for use as boundary conditions in analysis of the TMI-2 accident thermal-hydraulics.

CONTENTS

FIGURES

TABLES

TMI-2 ONCE THROUGH STEAM GENERATOR AUXILIARY FEEDWATER INJECTION RATES

1. INTRODUCTION

On March 28, 1979 a reactor accident occurred at the Babcock & Wilcox (B&W) designed Three Mile Island Unit 2 (TMI-2) nuclear power plant. This accident was initiated by a trip of the pumps supplying main feedwater to the Once Through Steam Generators (OTSGs). The subsequent failure to provide adequate decay heat removal capability ultimately resulted in severe damage to the nuclear core. Understanding of the accident thermal-hydraulics and fuel behavior is one of the primary responsibilities of the TMI Accident Evaluation Program (AEP), which is managed by EG&G Idaho. During the first day of the TMI-2 accident, the OTSGs were the major heat removal mechanisms. Knowledge of the secondary side conditions, in particular the feedwater injection rates, is a required boundary condition for performing thermal-hydraulic analysis of the reactor system during the accident.[a] Since the initiating event for the accident was the trip of the main feedwater pumps, the subsequent source of secondary liquid was the Auxiliary (or Emergency) Feedwater (AFW) pumps. Unfortunately, neither the AFW injection rates into the two OTSGs nor the steaming rates from the OTSGs were recorded. However, the secondary side liquid levels and pressure were recorded on the reactimeter system. From the previous analysis of the recorded levels,[1] it is possible to calculate the secondary side mass and energy storage. Analysis of changes in the secondary mass and energy storage, in conjunction with certain assumptions and events recorded on the alarm printer, allows estimation of the AFW and steaming rates. The primary assumptions used are; (a) during periods of secondary mass decrease there was no AFW injection into the OTSG, with mass loss by steaming from the OTSG; and (b) during periods of mass increase resulting from AFW injection, the steaming continued at

---

a. The purpose of this study was to provide secondary boundary conditions for use in the TMI-2 international standard problem.

approximately the same rate as following the cessation of the AFW.[a] This report will describe the secondary side of the OTSGs, and discuss the analysis approach used to obtain the AFW injection and OTSG steaming rates.

Results from the analysis will be presented and discussed. In addition, an analysis of the energy transfer into the OTSGs will be presented and compared to estimates of the core power decay energy and the energy flow out of the Pilot Operated Relief Valve (PORV).

---

a. The AFW injection rates and the steaming rates (indeed the timing of injection and steaming) are unknown. The stated assumptions result in the minimum primary to secondary heat transfer rates. These assumptions seem to be the most reasonable assumptions to use based upon the operators use of AFW injection to establish and maintain levels, and the use of the turbine bypass control valves and the Atmospheric Dump Valves (ADVs) to control secondary pressures.

2. SYSTEM DESCRIPTION

The level in the secondary side of the TMI-2 OTSGs was measured using three overlapping ranged differential pressure transmitters to measure the hydrostatic head of the liquid and steam columns in the steam generator. These measurements have previously been combined to obtain a best estimate composite secondary liquid level for each OTSG (see Reference 1). Knowledge of this liquid level, and physical dimensions of the OTSG, allows calculation of the total secondary mass, which will be discussed in the next section. Physical dimensions of the OTSG secondaries are provided in Table 1.

A flow diagram of the steam system and measurement locations for the two OTSGs is shown in Figures 1a and 1b. Note that the steam pressure measurements (SP-6A-PT1 and 2 and SP-6B-PT1 and 2) were located in the containment building, upstream of the Main Steam Isolation Valves (MSIVs), MS-V4A and B and MS-V7A and B. The turbine header pressures (SP-10A-PT1 and 2 and SP-10B-PT1 and 2) were located downstream of the MSIVs, along with the main steam temperature measurements (SP-4A-TE and SP-4B-TE). A tabulation of the secondary side measurements which were recorded during the accident is provided in Table 2. From Figures 1a and 1b notice that the turbine bypass lines branch off from the main steam lines upstream of the MSIVs, with no branches between the MSIVs and the main steam stop valves in the steam chest. When the turbine tripped, the main steam stop valves closed and blocked steam flow to the steam chest and turbine. As a result, closure of the MSIVs had no effect upon steam generator isolation. The turbine bypass lines, controlled by the bypass isolation valves MS-V15A and B, routed steam into the hot condenser. When the condenser was unavailable, the steam generators could be steamed through the Atmospheric Dump Valves (ADVs), MS-V3A and B, located in the A2 and B2 steam lines.

A schematic of the AFW injection and control system is shown in Figure 2. There are three AFW pumps (EF-P-1, EF-P-2A, and EF-P-2B) feeding into a common header, with cross connect block valves (EF-V5A and EF-V5B) in the header between the pumps. Pump EF-P-1 is a steam turbine driven pump with twice the flow capacity of each of the other motor driven pumps.

TABLE 1. OTSG SECONDARY SIDE PHYSICAL DIMENSIONS

Volume (m^3)	Flow Area (m^2)	Length (m)
Riser Section		
62.68	3.946[a]	15.885
Downcomer Section[b]		
21.29	2.167	9.825
Steam Outlet Region		
13.05	2.167	6.022
Steam Lines (2)[c]		
A - 58.64	0.502[d]	79.1
B - 60.40	0.502	81.7
Turbine Bypass Lines[e]		
A - 0.15	0.026	5.8
B - 0.09	0.026	3.3

a. The flow area of the riser section has been adjusted to provide the actual volume after subtracting the volumes of the support grids.

b. The downcomer section is considered to extend all the way down to the lower tube sheet for the purposes of this summary.

c. Dimensions are to the main steam isolation valves, and are combined dimensions for both steam lines in each OTSG.

d. The minimum flow for two 24-inch outside diameter (OD) steam lines is used.

e. The volume for both of the bypass lines in each OTSG between the main steam lines are the bypass control valves, MS-V15A and MS-V15B, is used.

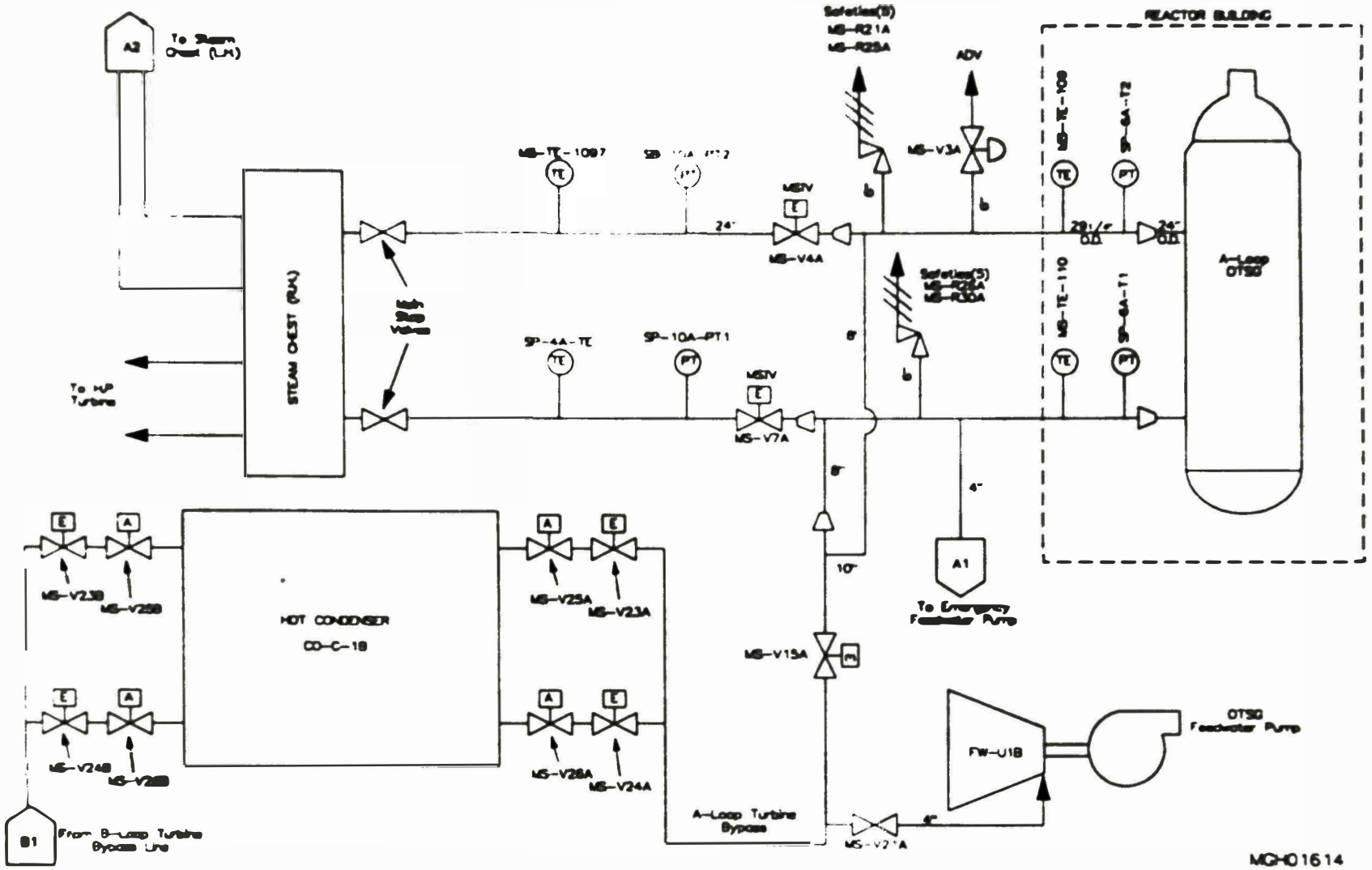

Figure 1a. TMI-2 main steam system flow diagram - A-loop.

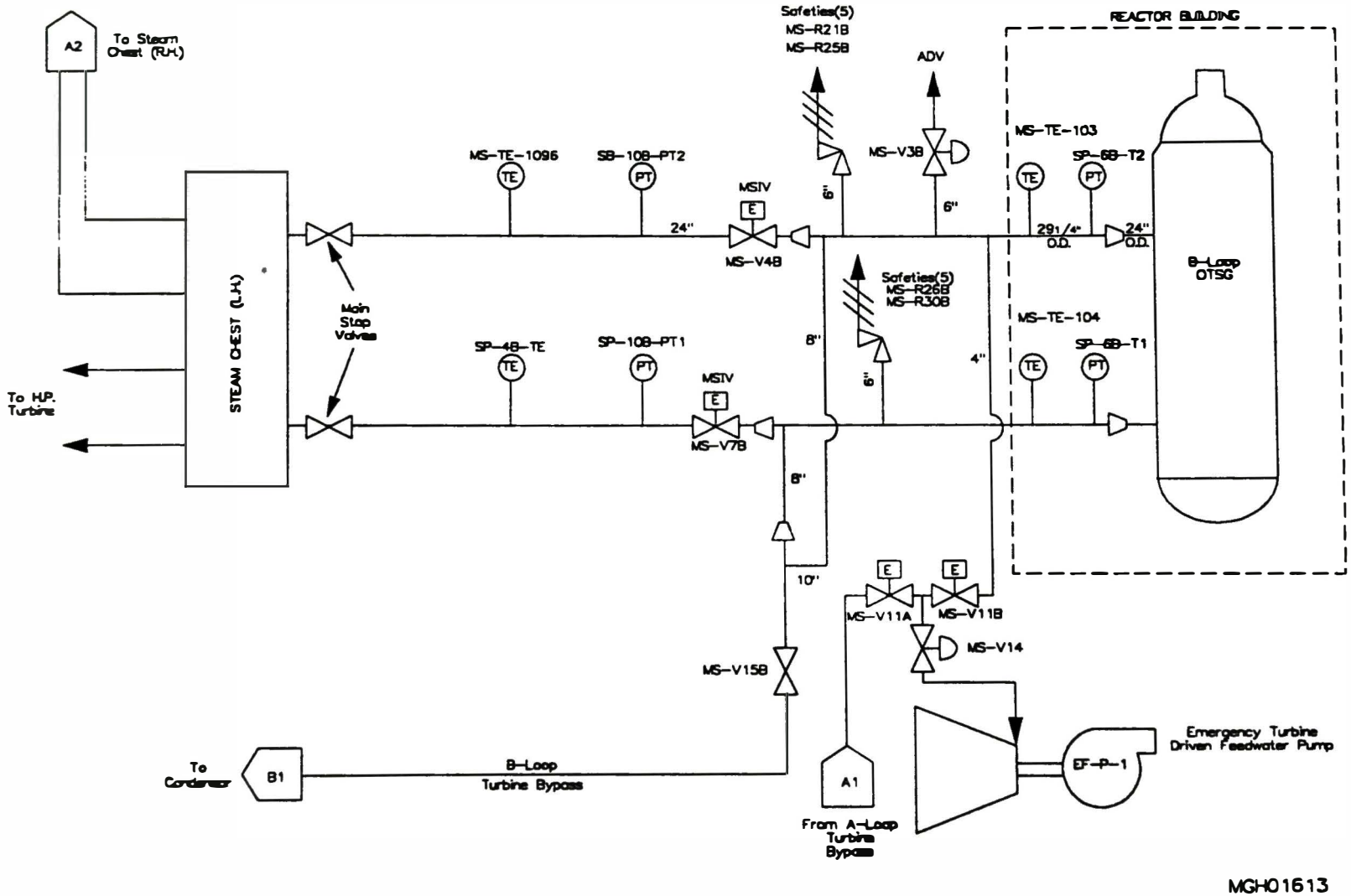

Figure 1b. TMI-2 main steam system flow diagram - B-loop.

TABLE 2. TMI-2 STEAM GENERATOR RECORDED MEASUREMENTS LIST

Identification	Measurement Description	Measurement Location	Recorded Range
MS-PT-1100-P	HP Turbine 1 Steam Generator Side A Pressure	Turbine Building	0 - 1500 psig
MS-TE-110-M	Steam Generator A1 Outlet Temperature	R.B. - Steam Line A1	0 - 800°F
SP-10A-PT1-R	Turbine Header Pressure - Loop A	T.B. - Down from MSIV	600 - 1200 psig
SP-12A-TE1-P	Steam Generator A - Upper Downcomer Temperature	Elevation 320'1"	70 - 570°F
SP-1A-LT1-P	Steam Generator A - Full Range Level	Elevation 294'9" - 346'4"	0 - 600 inches
SP-1A-LT2-R	Steam Generator A - Operating Level	Elevation 302'9" - 327'1"	0 - 100%
SP-1A-LT4-R	Steam Generator A - Start-up Level	Elevation 294'9" - 327'1"	0 - 200 inches
SP-2A-TE1-P	Steam Generator A - Shell Temperature	Elevation 303'2": SG Shell	70 - 600°F
SP-2A-TE5-P	Steam Generator A - Shell Temperature	Elevation 338'3": Steam Outlet	70 - 600°F
SP-3A-TE-P	Steam Generator A - Downcomer Temperature	Elevation 295'3": Downcomer	0 - 600°F
6P-4A-TE-P	Steam Generator A - Main Steam Temperature	T.B. - Steam Line A1	100 - 650°F
SP-6A-PT1-P	Steam Generator A - Steam Pressure in Steam Line A1 or A2	R.B. - Steam Line A1 or A2	0 - 1200 psig
SP-6A-PT1-R	Steam Generator A - Steam Pressure	R.B. - Steam Line A1 or A2	0 - 1200 psig
MS-PT-1099-P	HP Turbine 1 Steam Generator Side B Pressure	Turbine Building	0 - 1500 psig
SP-12B-TE1-P	Steam Generator B - Upper Downcomer Temperature	Elevation 320'1"	70 - 570°F
SP-1B-LT1-P	Steam Generator B - Full Range Level	Elevation 294'9" - 346'4"	0 - 600 inches
SP-1B-LT2-R	Steam Generator B - Operating Level	Elevation 302'9" - 327'1"	0 - 100%
SP-1B-LT4-R	Steam Generator B - Start-up Level	Elevation 294'9" - 327'1"	0 - 250%
SP-2B-TE5-P	Steam Generator B - Shell Temperature	Elevation 338'3": Steam Outlet	70 - 600°F
SP-4B-TE-P	Steam Generator B - Main Steam Temperature	Turbine Building	100 - 650°F
SP-6B-PT1-P	Steam Generator B - Steam Pressure	R.B. - Steam Line A1 or A2	0 - 1200 psig
SP-6B-PT1-R	Steam Generator B - Steam Pressure	R.B. - Steam Line A1 or A2	0 - 1200 psig

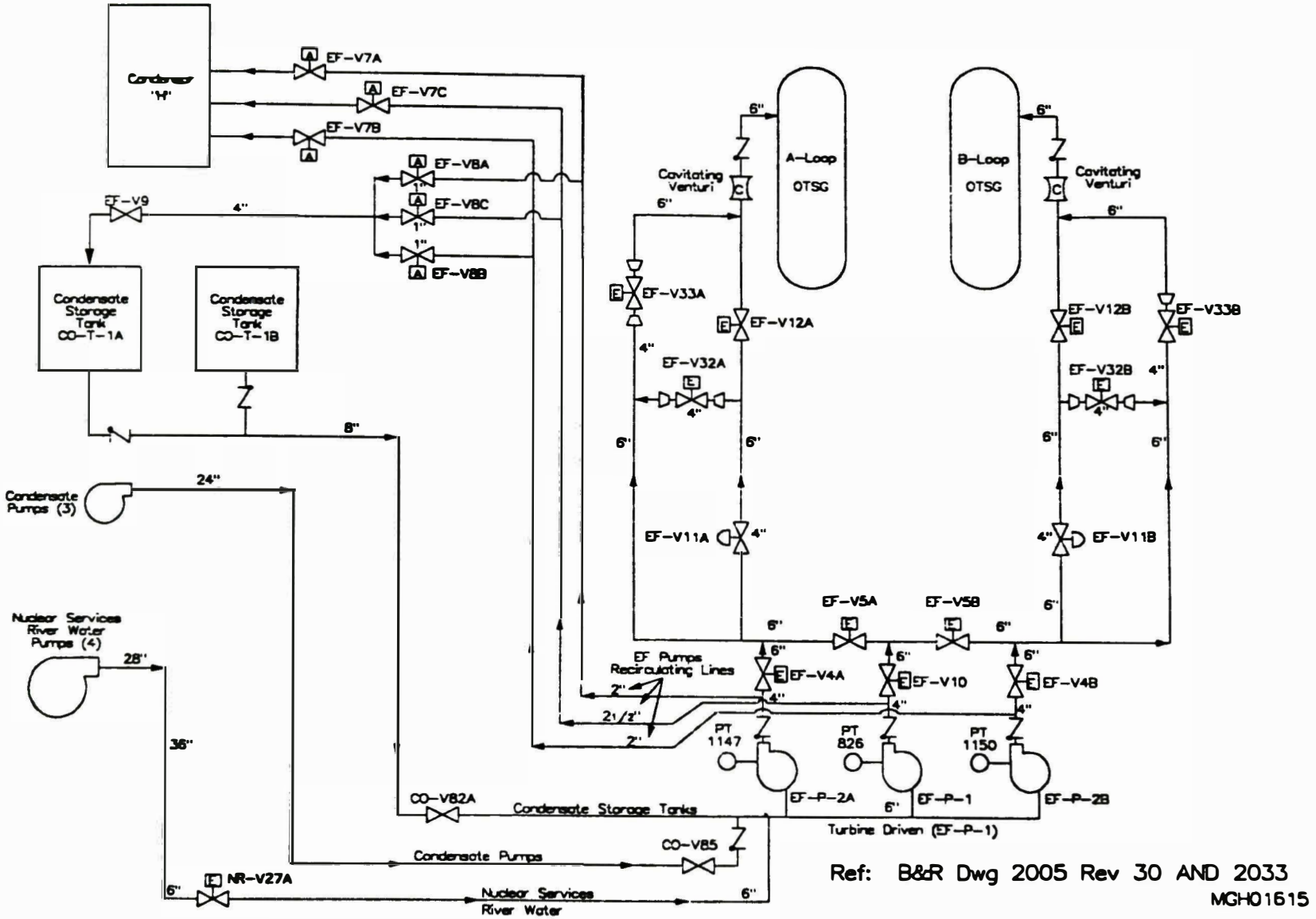

Figure 2. Auxiliary feedwater injection flow diagram.

Steam for this pump is obtained from the A1 and B1 steam lines, as shown in Figure 1. Each pump is equipped with a block valve upstream of the header, with recirculation lines back to the condensate storage tanks, or into the hot condenser. Liquid for the suction to the AFW pumps is provided from any of three possible sources. The normal pump suction is aligned to the condensate storage tanks. Pump suction can also be aligned to the three condensate pumps, which use the condenser hot well as a liquid source. This path is important since during one time period (360-428 minutes) the secondary liquid level was increasing while all three of the AFW pumps were off.[a] A third possible source of AFW pump suction was from the four nuclear services river water pumps. This path would provide water at a much lower supply temperature than the other two sources (river water was about 45°F on March 28, 1979). Characteristics of the different pumps are provided in Table 3.

---

a. At 282 minutes the operators stopped the AFW injection pump EF-P-2A. At this point none of the AFW injection pumps were operating. At 360 minutes the operators began filling the A-loop OTSG secondary from 49% to 95% on the operating level range. The operators started EF-P-2A at 428 minutes. Between 282-428 minutes the alarm printer does not record any AFW pumps as operating. The most logical choice is that the condensate pumps were being used to fill the secondary.

TABLE 3. PUMP CHARACTERISTICS[a]

Parameter	AFW Pumps Motor Driven (2)	AFW Pumps Turbine Driven (1)	Condensate Booster Pumps (3)	River Water Pumps (4)
Flow, L/s	29.6	59.2	608.0	1,077
Flow, gpm	470	940	9,650	17,100
Head, MPa	7.66	7.79	2.75	0.21
Head, psid	1,110	1,130	399	30
Speed, rpm	3,560	4,250		
Horsepower	450	895	2,750	400

a. Taken from the TMI-2 Final Safety Analysis Report (FSAR), Tables 9.2 and 10.1. Parameters are given for a single pump.

3. THEORY

Knowledge of the secondary liquid levels and pressures allows calculation of the total secondary mass and total energy (enthalpy), assuming saturated conditions on the secondary side.[a] A simplified model of the secondary system is shown in Figure 3. Using the measured secondary pressure, and assuming saturation, the phase densities and enthalpies can be obtained from the steam tables. The total secondary mass, M_{tot}, at a specific time can then be written as,

$$M_{tot} = M_f + M_{g-sg} + M_{g-pipe} \tag{1}$$

where the liquid mass is given by

$$M_f = \rho_f \cdot A_{sg} \cdot L \tag{2}$$

and the steam mass in the OTSG is given by

$$M_{g-sg} = \rho_g \cdot (V_{sg} - A_{sg} \cdot L) \tag{3}$$

and the steam mass in the steam lines is given by

$$M_{g-pipe} = \rho_g \cdot V_{pipe} \tag{4}$$

and where

L = the secondary liquid level from the bottom tube sheet (m)

ρ_f, ρ_g = the saturated liquid and steam densities (kg/m^3).

---

a. Assuming saturated secondary conditions is a reasonable assumption in light of the known steaming from the OTSGs. Superheated steam is unlikely whenever AFW injection occurred, or whenever a secondary level was established. In addition, after 570 minutes the A-loop OTSG lower downcomer temperature (SP-3A-TE-P) was recorded on the utility printer once every two minutes. This temperature followed saturation temperature for the rest of the day.

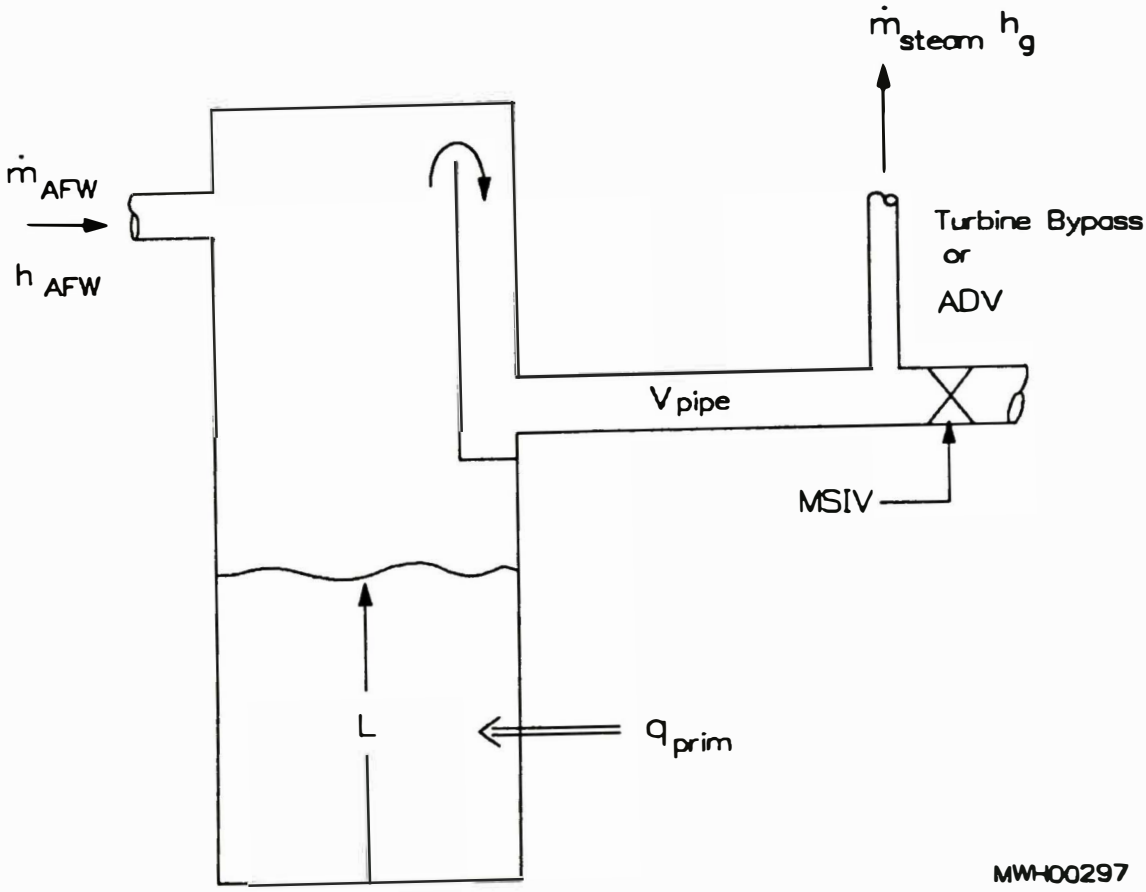

Figure 3. OTSG simplified analysis model.

V_{sg} = the total volume of the steam generator secondary side

= 97.02 m^3

V_{pipe} = the volume of the steam line piping (m^3)

A_{sg} = the flow area of the bottom portion of the steam generator, in the section where the liquid level was established

= 6.113 m^2.

The mass balance for the secondary side can be obtained from the summation of mass input from the AFW, $\dot{m}_{AFW}$, output from steaming, $\dot{m}_{steam}$, and changing mass storage in the secondary side obtained by differentiating the total mass given by Equation (1), dM_{tot}/dt. This results in the AFW mass flow rate given by,

$$\dot{m}_{AFW} = dM_{tot}/dt - \dot{m}_{steam} \tag{5}$$

The total energy stored in the secondary side, Q_{tot}, can be obtained from the product of the phasic enthalpies and phasic masses contained in the secondary side. Thus,

$$Q_{tot} = h_f \cdot M_f + h_g \cdot (M_{g-sg} + M_{g-pipe}) \tag{6}$$

where

h_f, h_g = the saturated liquid and steam phasic enthalpies (J/kg).

The balance of energy flows for the secondary can be obtained from a summation of the energy flow from the primary into the secondary, q_{prim}, the energy transferred into the secondary via the AFW, the energy

transferred from the secondary via steam flow out of the secondary, and the changing energy storage in the secondary obtained from differentiating Equation (6), dQ/dt. The energy flow into the secondary from the primary system can thus be obtained as,

$$q_{prim} = dQ/dt - \dot{m}_{AFW} \cdot h_{AFW} + \dot{m}_{steam} \cdot h_g \tag{7}$$

where

h_{AFW} = the enthalpy of the AFW liquid at an assumed injection temperature of 310K (100°F)

= 1.637×10^5 J/kg.

4. ANALYSIS RESULTS

In Figure 4, the secondary pressures for both steam generators are compared to the primary system pressure[2] for the first 300 minutes of the TMI-2 accident.[a] For approximately 22 minutes the primary system pressure was nearly equal to the A-loop OTSG pressure. The B-loop OTSG pressure remained slightly lower than the A-loop. The primary and secondary pressures remained nearly equal until about 75 minutes, after which the B-loop OTSG rapidly depressurized due to reduced heat transfer and continued AFW injection, following the B-loop pumps trip. The primary pressure continued to follow the A-loop OTSG,[b] until about 130 minutes, when the A-loop OTSG began a sustained depressurization, reaching atmospheric pressure by 270 minutes. At 174 minutes the B-loop OTSG pressure abruptly jumped from about 1 to 4.8 MPa (150 psig to 700 psig), as a result of the 2B pump transient. A tabulation of known and surmised operator and Integrated Control System (ICS) actions is provided in Table 4.

The secondary side total mass and energy were calculated for the first 300 minutes of the accident as outlined in the previous section. The total secondary mass (liquid and steam) for the A-loop OTSG is compared to the composite liquid level in Figure 5. The total secondary mass (liquid and steam) for the B-loop OTSG is compared to the composite liquid level in Figure 6. Since most of the secondary mass changes were due to changing liquid mass, the total mass closely follows the liquid level. Following the calculation of the total mass, the data were filtered using a digital low band pass filter with an upper pass frequency of 0.013 Hz.[c] This was

---

a. The analysis was only performed for the first 300 minutes, since this is the extent of the standard problem requirements under which this analysis was performed.

b. An exception occurred during the period of 85-100 minutes, when the secondary pressure decreased below the primary pressure. This is discussed in Section 4.1.

c. As a result of the digital filter, timing and magnitude of the data during rapid mass changes, such as the initial boiloff, are somewhat modified relative to the unfiltered data.

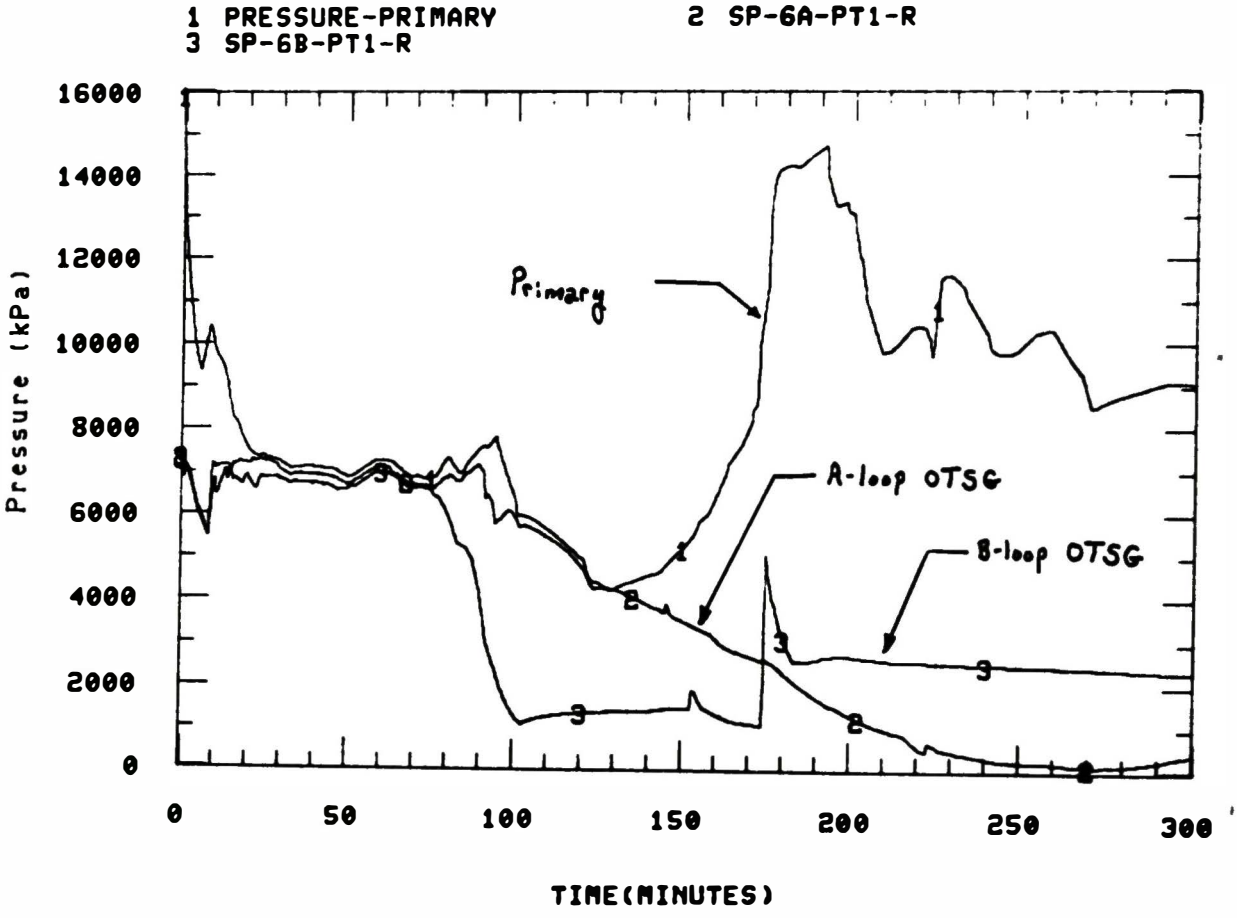

Figure 4. Comparison of primary and secondary pressures.

TABLE 4. TMI-2 SEQUENCE OF EVENTS FOR THE STEAM GENERATORS[a]

Time (min.)	Event
0.0 (4:00:37)	Feedwater Pump Trip
*D 0.23	AFW pumps (EF-P-1, EF-P-2A, and EF-P-2B) started and reached normal discharge pressures.
1.5	Steam Generators were drying out (steam pressure dropping).
8.3	AFW injection started [Emergency Feedwater block valves (EF-V12A and EF-V12B) were opened]. Pressure automatically controlled using the turbine bypass valves at a pressure of 1010 ±10 psig.
22.	Primary system pressure approaching secondary pressure.
* 22.7	A-loop OTSG low level alarm cleared (26.6 inches).
* 25.6	EF-P-1 Stopped.
* 26.8	B-loop OTSG low level alarm cleared (26.6 inches).
* 36.1	Operator stopped Emergency Feedwater Pump 2B (EF-P-2B) after filling both SGs to an indicated level of about 38 inches on the start-up range.
55.	Operator shut Emergency Feedwater Control Valve (EF-V11B) after attempts to throttle the valve failed to stop the increasing level in SG-B.
60.8	Operator transferred steam generator pressure control from the Turbine Bypass Valves (MS-V25A), (MS-V25B), (MS-V26A), and (MS-V26B) to the Main Steam Dump Valves (MS-V3A) and (MS-V3B). Pressure control was maintained by intermittent use of these valves until use of (MS-V3B) was terminated at 86.4 minutes.
73	B-loop main reactor coolant pumps off.
77.	Operator closed the Emergency Feedwater Block Valve (EF-V12B) to halt the rise in B-loop OTSG level which had reached 90 inches.
86.4	The B-loop MSIVs (MS-V4B) and (MS-V7B) and the cross connect Valve (EF-V5B) were closed. Operators believed that the B-loop OTSG was completely isolated.
92	A-loop OTSG boiled dry.

TABLE 4. (continued)

	Time (min.)	Event
	94.2	Feed increased to A-loop OTSG to increase level from 8 inches on start-up range to 50% on operating range.
	100	A-loop main reactor coolant pumps off.
	153	B-loop OTSG level increased (operator action).
	174.1	Main reactor coolant pump RC-P-2B started.
	174.3	B-loop OTSG steam pressure increased from 140 psig to 720 psig in two minutes.
	174.8	Steam pressure control was automatically transferred from the Main Steam Dump Valves (MS-V3A) and (MS-V3B) to the Turbine Bypass Valves which were under manual control.
*	176.1	Operator opened MSIVs (MS-V4B) and (MS-V7B) for 12 seconds.
	183.7	Turbine Bypass Isolation Valve (MS-V15B)*, AFW injection valves (EF-V11B) and (EF-V12B), and AFW cross connect valve (EF-V5B) were closed. Operators believed that B-loop OTSG was isolated for a second time.
*	190.5	Operator stopped Emergency Feedwater Pump 2A (EF-P-2A).
*	192.9	Main reactor coolant pump RC-P-2B was stopped.
*	215.1	Operator started Emergency Feedwater Pump 2A.
	248	Main reactor coolant pump RC-P-1A was started.
	249	Main reactor coolant pump RC-P-1A was stopped.
*	282.2	Emergency Feedwater Pump 2A was stopped.
	359.9	Operator commenced filling A-loop OTSG level from 49% to 95%.
*	428.5	Operator started AFW Pump EF-P-2A.
*	437.	Operator stopped AFW Pump EF-P-2A.
	589	Hydrogen burn
*	693.7	Operator started AFW pump EF-P-2B.

TABLE 4. (continued)

Time (min.)	Event
* 712.1	Operator stopped AFW pump EF-P-2B.
932	RC-P-1A bumped for 10 seconds Temperatures and Pressure drop
950	RC-P-1A started.

a. This sequence of events is based upon the alarm printer output and the GPU sequence of events (see Reference 3).

b. * - Timing for these items are verified from the alarm printer output. Note that the alarm printer output is unavailable from 73.3-159.5 minutes due to an operator clearing the alarm memory buffer.

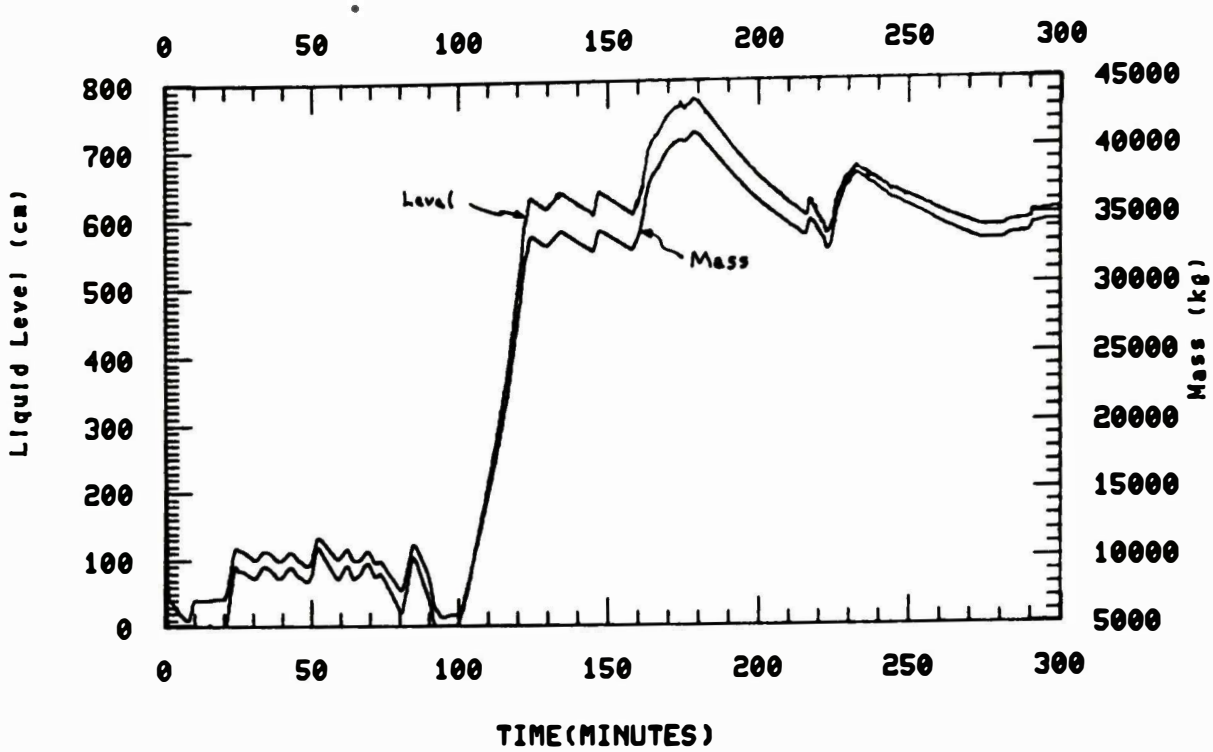

Figure 5. A-loop OTSG level and total mass comparison.

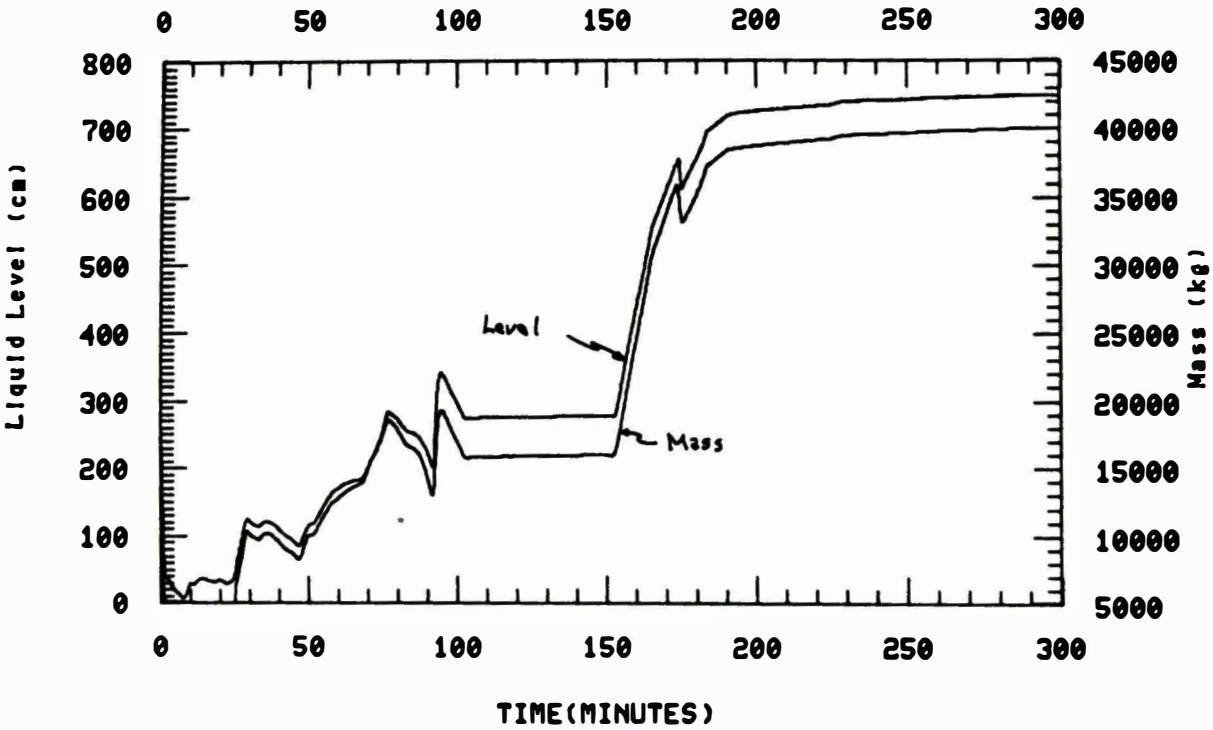

Figure 6. B-loop OTSG level and total mass comparison.

done in an attempt to smooth the data prior to differentiation for obtaining the mass flow rate changes from Equation (5). Unfortunately, this procedure was unsuccessful due to the inherent problems of differentiating data. The method finally used was to take the difference in total mass over time segments in which the total mass was changing at a reasonably constant rate, and divide the difference by the time period. The average rates of change in the total secondary mass for the various time segments are tabulated in Table 5 for the A-loop OTSG and in Table 6 for the B-loop OTSG. Also tabulated are the steaming rates assumed during periods of increasing mass, and the calculated AFW injection rates. The primary assumptions used were; (a) during periods of secondary mass decrease there was no AFW injection in the OTSG, with mass loss by steaming from the OTSG; and (b) during periods of mass increase resulting from AFW injection, the steaming continued at approximately the same rate as prior to and following the AFW injection. Note that during periods of mass increase the actual steaming rate is unknown, and may be significantly greater than the assumed rate, which would result in greater heat transfer rates than calculated in this analysis. Secondary pressure was being controlled by the use of the turbine bypass control valves, and during periods of AFW injection, increased steam generation is likely. This was particularly significant during the initial AFW injection into dry steam generators. As a result, using the above assumptions results in calculation of the minimum AFW injection rates.

4.1 A-loop OTSG Results

The steaming rates tabulated in Table 5 for the A-loop OTSG are plotted in Figure 7.[a] By about 1.3 minutes the A-loop OTSG had essentially boiled dry, and the steaming rate dropped from a value of 140 kg/s to about 3 kg/s just before AFW injection started at 8 minutes. At 8 minutes the AFW block valves were opened, allowing liquid injection

---

a. The tabulated AFW flow rates are a lower bound estimate of the actual flow rates during the accident. A realistic upper bound estimate is not possible. A maximum possible flow rate could be determined from the pumps which were operating at any time; however, this estimate would be unrealistically high.

TABLE 5. A-LOOP OTSG AFW ANALYSIS RESULTS

Time (min.) Start	Time (min.) Stop	Secondary Mass Rate of Change[a] (kg/s)	Assumed Steaming Rate[b] (kg/s)	AFW Rate (kg/s)
0.0	0.3	-140.0	--	0.0
0.3	1.25	-140.0	--	0.0
1.25	1.5	-10.0	--	0.0
1.5	2.0	-2.7	--	0.0
2.0	5.0	-5.3	--	0.0
5.0	8.0	-2.88	--	0.0
8.0	10.2	11.05	-2.85[c]	13.9
10.2	19.8	0.3	-2.80	3.1
19.8	24.15	14.56	-2.64	17.2
24.15	25.5	-2.56	--	0.0
25.5	26.8	-0.95	--	0.0
26.8	30.5	-2.81	--	0.0
30.5	34.05	3.11	-2.69	5.8
34.05	38.95	-2.55	--	0.0
38.95	42.8	2.74	-2.75	5.5
42.8	48.5	-3.02	--	0.0
48.5	52.4	9.02	-3.58	12.6
52.4	59.0	-4.03	--	0.0
59.0	61.9	4.15	-4.65	8.8
61.9	64.90	-5.11	--	0.0
64.9	69.0	2.94	-4.96	7.9
69.0	71.95	-4.79	--	0.0
71.9	73.2	1.63	-5.08	6.7
73.2	80.3	-5.08	--	0.0
80.3	84.7	12.77	-6.63	19.4
84.7	89.7	-7.81	--	0.0
89.7	91.8	-18.0	--	0.0
91.8	94.65	-4.74	--	0.0
94.65	100.00	0.85	-4.45	5.3
100.0	115.5	16.25	-3.55	19.8
115.5	124.55	23.32	-2.58	25.9
124.55	129.3	-2.22	--	0.0

TABLE 5. (continued)

Time (min.) Start	Stop	Secondary Mass Rate of Change [a] (kg/s)	Assumed Steaming Rate [b] (kg/s)	AFW Rate (kg/s)
129.3	134.45	3.26	-2.24	5.5
134.45	144.8	-2.25	--	0.0
144.8	147.4	9.28	-2.22	11.5
147.4	157.9	-2.13	--	0.0
157.9	174.1	8.11	-2.09	10.2
174.10	178.7	3.38	-3.22	6.6
178.7	195.3	-4.07	--	0.0
195.3	215.6	-2.90	--	0.0
215.6	217.45	9.98	-4.32	14.3
217.45	221.5	-5.30	--	0.0
221.5	223.2	-8.21	--	0.0
223.2	226.2	15.17	-7.43	22.6
226.2	228.7	10.05	-5.65	15.7
228.7	232.8	4.89	-3.91	8.8
232.8	244.5	-2.62	--	0.0
244.5	273.0	-1.73	--	0.0
273.0	276.	-0.44	--	0.0
276.	300.	0.92	0.0	0.92

a. The tabulated rate of change in the secondary mass is the average rate over the specified time segment, from the filtered total secondary mass.

b. The steaming rate assumed for calculation of the AFW injection rate during increases in secondary mass.

c. The actual steaming rate was probably significantly larger than this value. However, no data exists upon which to base a better estimate, without performing a primary side mass and energy balance.

TABLE 6. B-LOOP OTSG AFW ANALYSIS RESULTS

Time (min.) Start	Time (min.) Stop	Secondary Mass Change Rate (kg/s)[a]	Assumed Steaming Rate (kg/s)[b]	AFW Rate (kg/s)
0.	2.05	-99.33	--	0.0
2.05	5.00	-5.20	--	0.0
5.0	8.0	-2.92	--	0.0
8.0	10.1	8.16	-2.92[c]	11.1
10.1	23.85	0.22	-2.68	2.9
23.85	29.25	14.01	-2.49	16.5
29.25	32.9	-2.47	--	0.0
32.9	36.1	1.91	-1.89	3.8
36.1	37.5	-1.32	--	0.0
37.5	46.7	-3.01	--	0.0
46.7	50.0	7.36	-3.04	10.4
50.0	51.5	1.89	-3.20	5.1
51.5	58.0	5.84	-3.36	9.2
58.0	62.5	2.51	-3.59	6.1
62.5	68.0	1.08	-3.72	4.8
68.0	77.0	7.99	-4.01	12.0
77.0	80.5	-4.19	--	0.0
80.5	83.0	-6.21	--	0.0
83.0	85.0	-1.82	--	0.0
85.00	88.0	-4.54	--	0.0
88.0	91.65	-12.22	--	0.0
91.65	94.65	34.82	-6.84	41.66
91.65	103.2	-6.84	--	0.0
103.2	152.5	0.10	0.0	0.10
152.5	165.5	19.05	0.0	19.05
165.5	173.5	10.33	0.0	10.33
173.5	175.35	-34.6	--	0.0
175.35	183.5	8.24	0.0	8.24
183.5	191.0	2.82	0.0	2.82
191.0	223.0	0.38	0.0	0.38
223.0	237.0	0.43	0.0	0.43
237.0	257.0	0.15	0.0	0.15

TABLE 6. (continued)

Time (min.) Start	Stop	Secondary Mass Change Rate[a] (kg/s)	Assumed Steaming Rate[b] (kg/s)	AFW Rate (kg/s)
257.0	290.0	0.12	0.0	0.12
290.0	300.0	0.03	0.0	0.03

a. The tabulated rate of change in the secondary mass is the average rate over the specified time segment, from the filtered total secondary mass.

b. The steaming rate assumed for calculation of the AFW injection rate during increases in the secondary mass.

c. The actual steaming rate was probably significantly larger than this value. However, no data exists upon which to base a better estimate, without performing a primary side mass and energy balance.

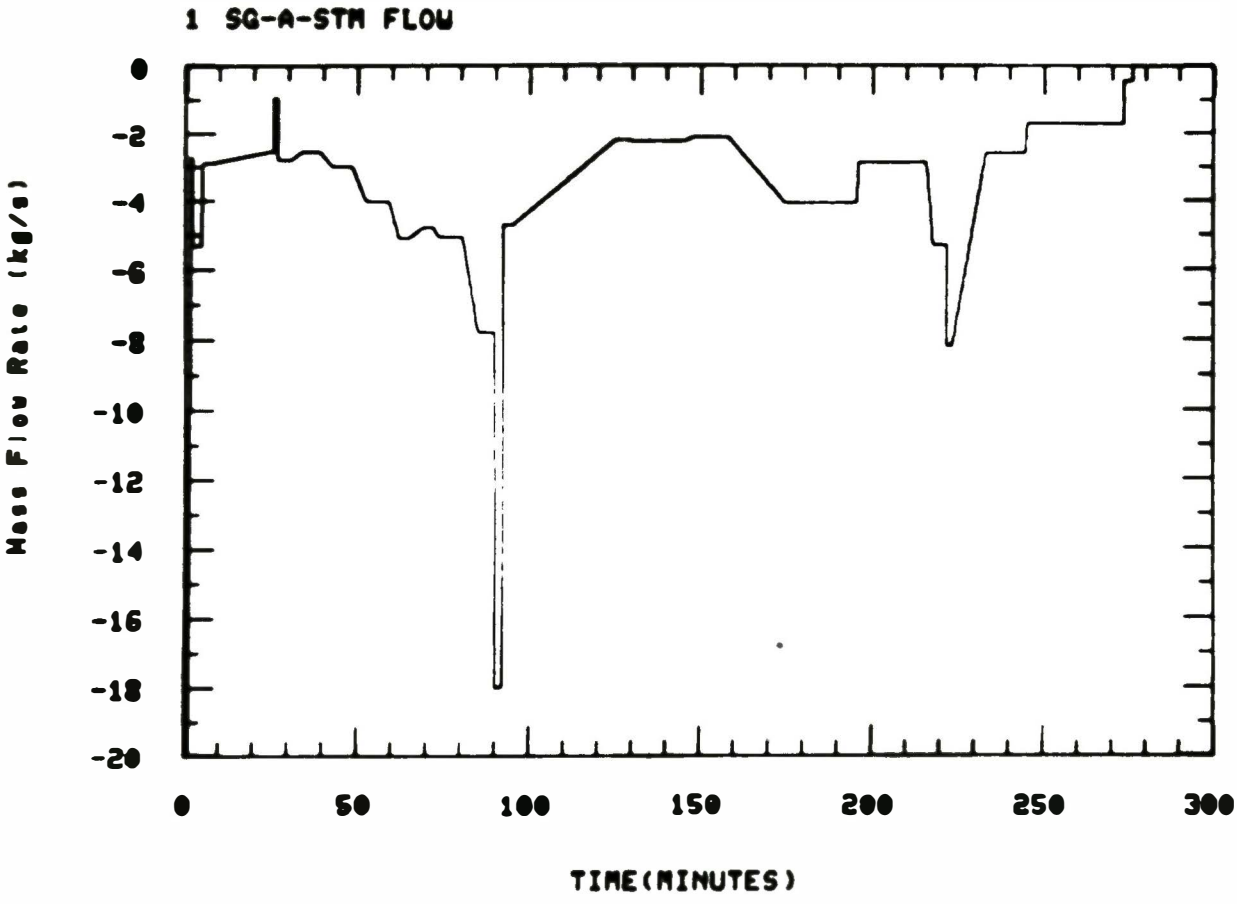

Figure 7. A-loop UTSG estimated steaming rates.

into both steam generators.[a] This resulted in increased secondary pressures and total secondary steam masses, although the liquid level did not begin increasing until 22 minutes. The AFW injection rates, calculated from this analysis, are shown in Figure 8 for the time period of 0-300 minutes and in Figure 9 for the first 100 minutes of the accident. The initial AFW injection rate calculated for the A-loop OTSG from the increased secondary mass is 13.9 kg/s. This value is significantly less than the nominal injection rate of 59 kg/s per OTSG (940 gpm) when all three AFW pumps were running.[b] The actual injection rate was probably closer to the nominal rate; however, it is not possible to calculate a better estimate from this analysis technique. At about 11 minutes the AFW pumps discharge pressures abruptly increased, indicating a cut back in the flow. The independent AFW analysis indicates a decrease in injection rate at about 10.2 minutes. At about 13 minutes. the discharge pressures again dropped. At 22 minutes the level in the A-loop OTSG began increasing, and the calculated AFW injection rate increased up to a value of 17.2 kg/s, still significantly less than the nominal injection rate. At 24 minutes the AFW injection into the A-loop OTSG apparently was terminated. Supporting evidence is the stopping of the AFW pump EF-P-1 at 25.6 minutes. The AFW injection rate into the A-loop OTSG during the initial injection period of 8-24 minutes was probably significantly greater than the rate calculated from this analysis. However, the injection rate was not measured and thus the actual injection is unknown, and cannot be accurately calculated.

---

a. Simultaneous with opening of the block valves, the discharge pressure from the AFW pumps abruptly dropped, indicating flow from the pumps. The pump discharge pressures were only recorded on the utility printer as the memory trip review during ±15 minutes of the reactor trip. Therefore, no data exists after 15 minutes for use in analysis of the AFW injection rates.

b. Note that the difference between the analysis results of 14 kg/s and the nominal rate of 59 kg/s is not representative of the expected uncertainty resulting from this analysis. This time period had the largest injection rates, and the largest heat transfer rates during the entire accident. With no level established in the secondary, this analysis technique only accounts for the increase in the secondary steam mass, with the steaming rate an unknown.

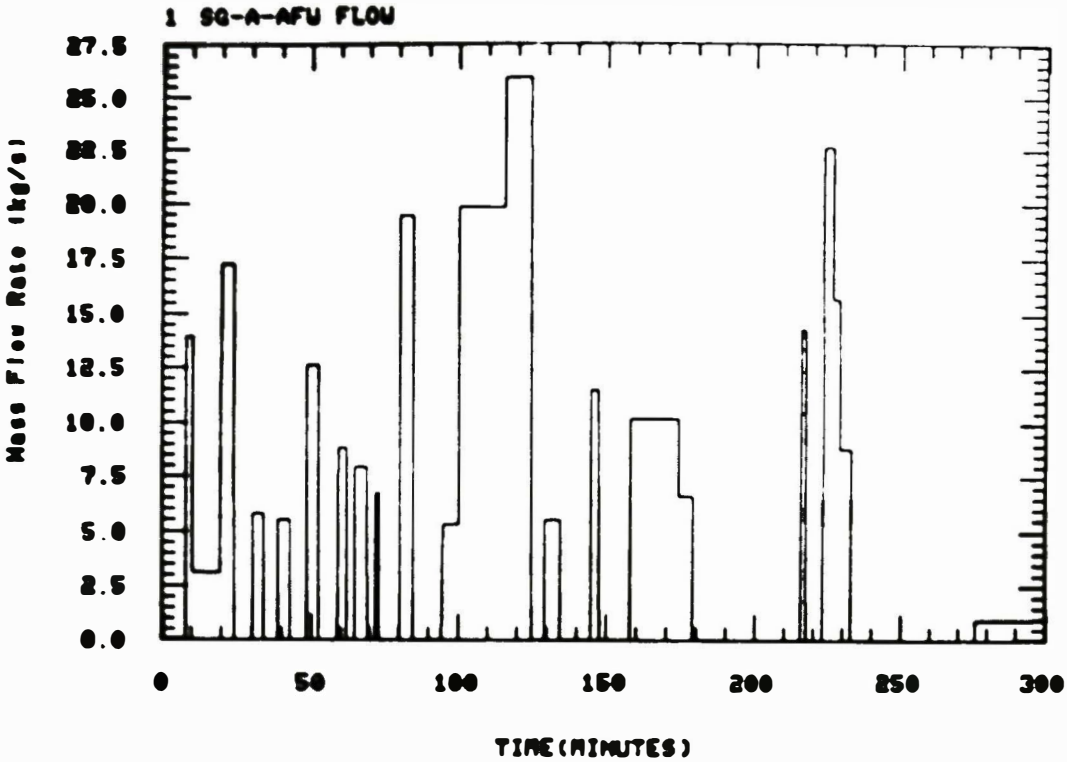

Figure 8. A-loop OTSG estimated AFW injection rates.

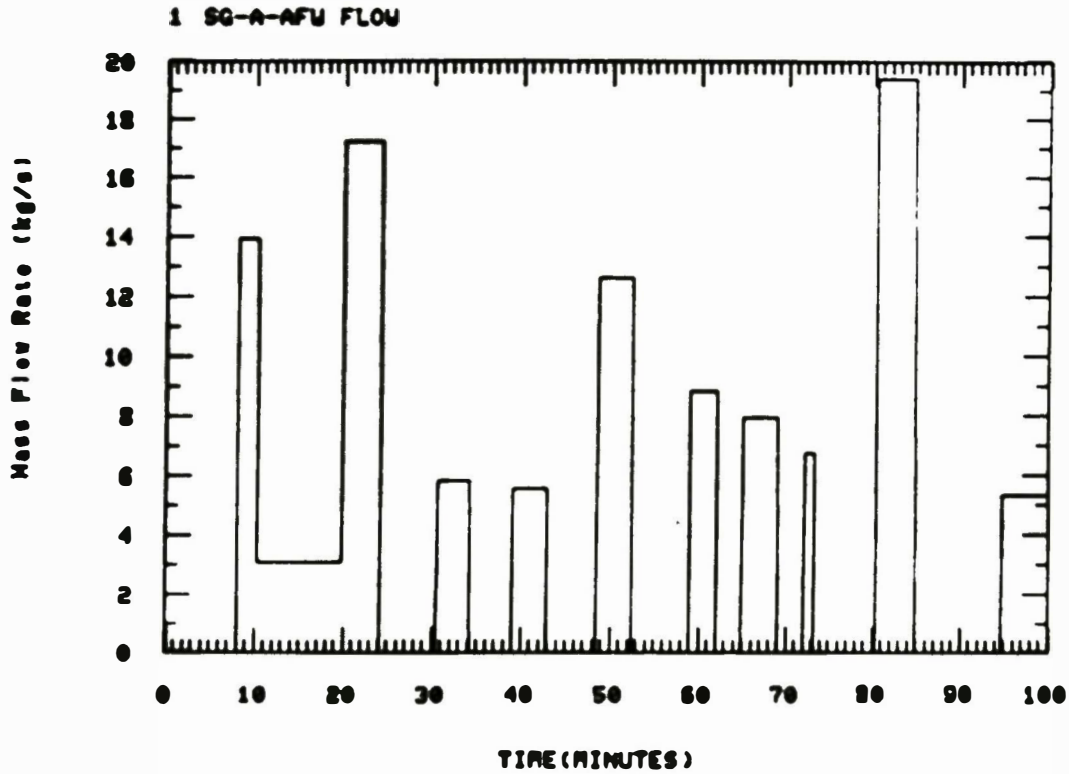

Figure 9. A-loop OTSG estimated AFW injection rates.

During the period of 24-85 minutes, the operators were cycling the AFW in an attempt to maintain a level of about 89 cm (35 inches) on the start-up range. At 85 minutes the AFW injection into the A-loop OTSG was terminated until 100 minutes. During this time the A-loop OTSG boiled dry (at about 92 minutes). This resulted in decreased heat transfer, which in turn, allowed the primary system pressure to begin increasing relative to the steam generator secondary pressure. At 94 minutes the primary system began depressurizing and the secondary pressure began a small increase. This is an indication of AFW injection, which is supported by a small increase in secondary mass. However, the secondary mass did not begin significantly increasing until 100 minutes, which is the tabulated AFW injection. The primary pressure continued to follow the A-loop OTSG secondary pressure until 130 minutes, when the primary system began to repressurize. At 100 minutes, when AFW injection was resumed, the level began a rapid rise up to 630 cm (50% on the operating range) in the next 20 minutes. This approximate level was maintained during the remainder of the first 300 minutes of the accident, as the secondary pressure continued to decrease to near atmospheric pressure.

Adding together the previously presented AFW injection and steaming rates, and integrating allows direct comparison to the total secondary mass.[a] This comparison is performed in Figure 10 for the A-loop OTSG. As expected, the integrated rates compare quite well to the total mass, from which they were derived.

4.2 B-loop OTSG Results

The analysis results for the B-loop OTSG are presented in Table 6. The resulting steaming rates are shown in Figure 11. As with the A-loop OTSG, the initial large steaming rate (for the B-loop OTSG this was 99 kg/s) decreased significantly when the OTSG dried out around 2 minutes,

---

a. An initial secondary mass of 20,240 kg was used. The unfiltered initial secondary mass was 26,580 kg. The difference is due to the filtering technique used to permit differentiation. Only a few initial condition points were used, and the rapid secondary mass depletion resulted in the stated initial mass after filtering.

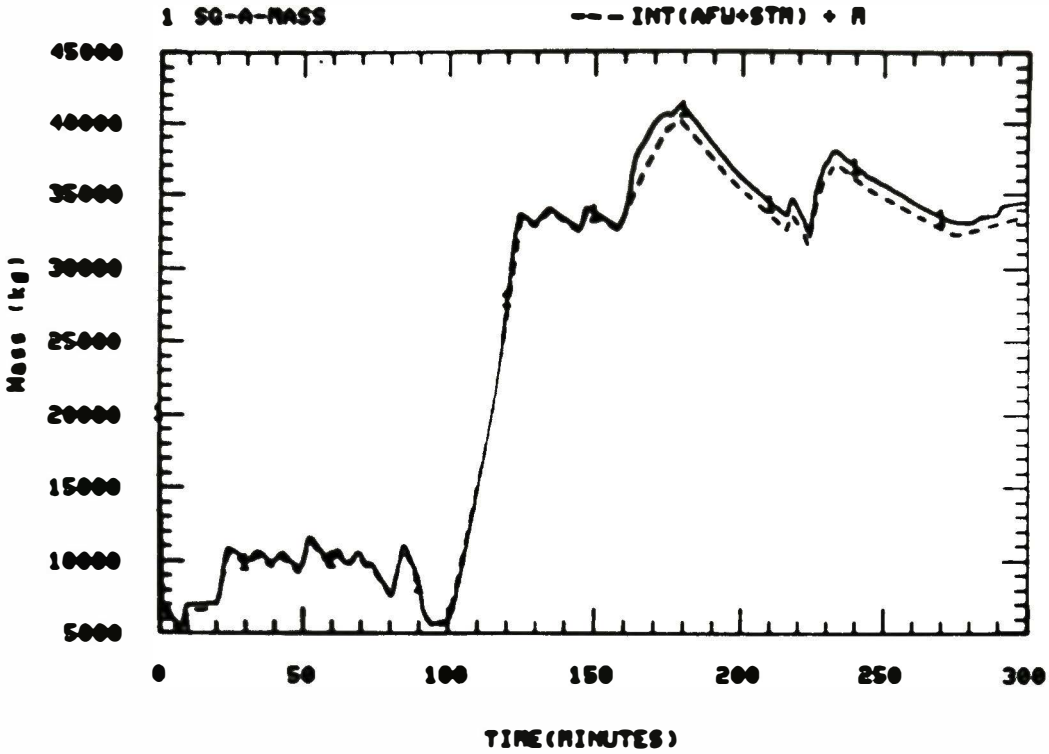

Figure 10. A-loop OTSG comparison of integrated rates and total mass.

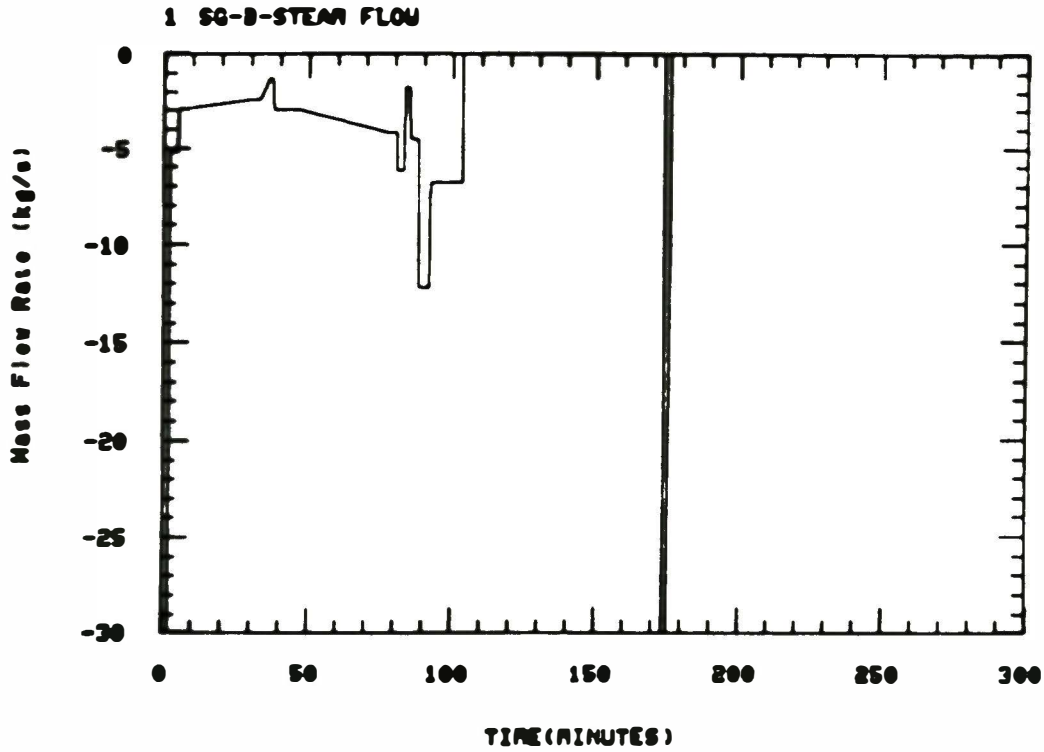

Figure 11. B-loop OTSG estimated steaming rates.

decreasing to a value of about 3 kg/s just prior to the beginning of AFW injection at 8 minutes. The calculated AFW injection rates for the B-loop OTSG are shown in Figure 12 for 0-300 minutes and in Figure 13 for the first 100 minutes. The initial injection rate calculated in this analysis was 11 kg/s, as compared to the nominal injection rate of 59 kg/s. As with the A-loop OTSG, the calculated rate significantly decreased shortly after 10 minutes. The injection rate significantly increased at 25 minutes when the secondary level began increasing (the OTSG was dry up to this time). This is supporting evidence that the calculated injection rates during this initial injection period are significantly low. At 25 minutes the AFW pump EF-P-1 was turned off. At 29 minutes the B-loop OTSG secondary mass began decreasing, indicating that AFW injection into the B-loop OTSG had been terminated. At 36 minutes the AFW pump EF-P-2B was turned off. From this time until 191 minutes, when the AFW pump EF-P-2A was turned off, only a single AFW pump was in operation.

At 47 minutes the B-loop OTSG secondary mass began increasing. At approximately 55 minutes the operator shut the AFW control valve (EF-V11B) after attempts to throttle the valve failed to stop the increasing level. At 58 minutes the calculated AFW injection decreased from 9.2 to 6.1 kg/s. It is apparent that the control valve did not close completely. This continued increase in level is apparently what led the operators to believe that there was a primary to secondary leak in the B-loop OTSG. At about 77 minutes the operator closed the AFW block valve (EF-V12B), at which time the AFW injection stopped. At 86 minutes the operators closed the MSIVs and the cross connect valve (EF-V5B).[a] They believed that this completely isolated the B-loop OTSG. However, closure of the MSIVs does not preclude steaming from the OTSG through either the turbine bypass or the ADV, as is evident from the continued decrease in secondary mass until 92 minutes. At this time the B-loop OTSG secondary mass began a significant increase over the next 3 minutes, before beginning to decrease again. This sequence is not discussed in the previous analysis reports (see References 3, 4, and 5). At about this same time, the operators began

---

a. Closure of these valves is not verified on the alarm printer since the alarm printer data was lost for 73.3 to 159.5 minutes.

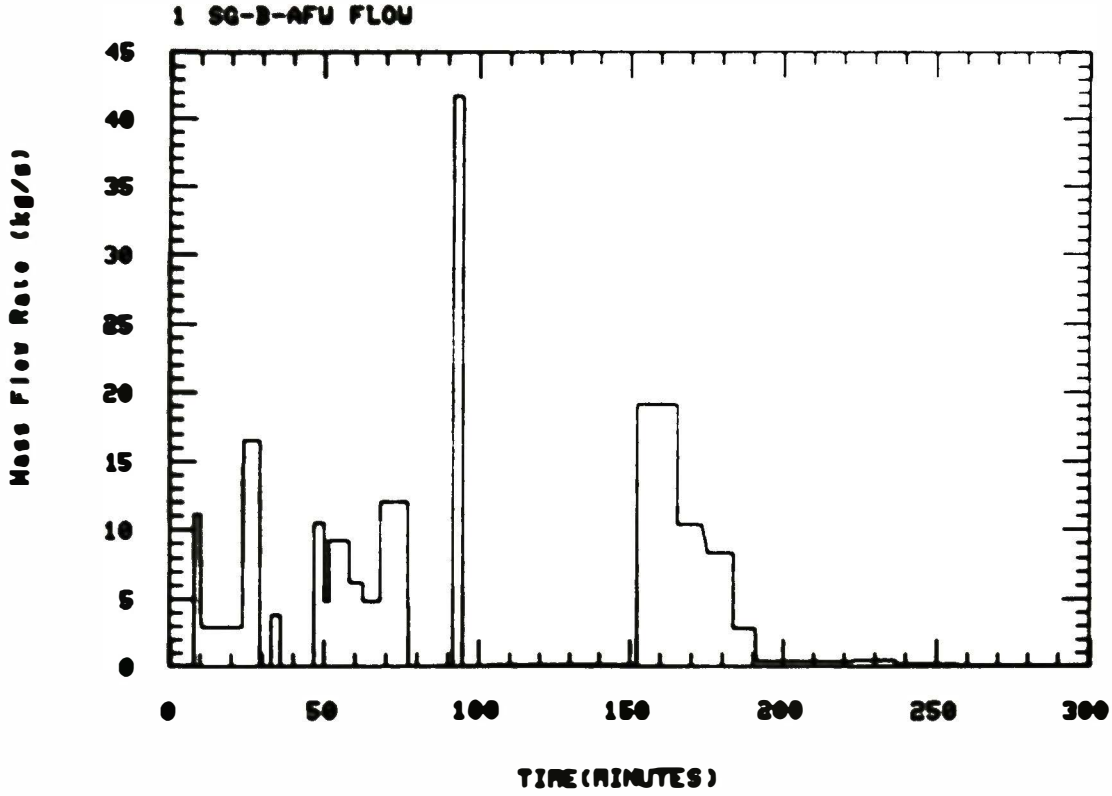

Figure 12. B-loop OTSG estimated AFW injection rates.

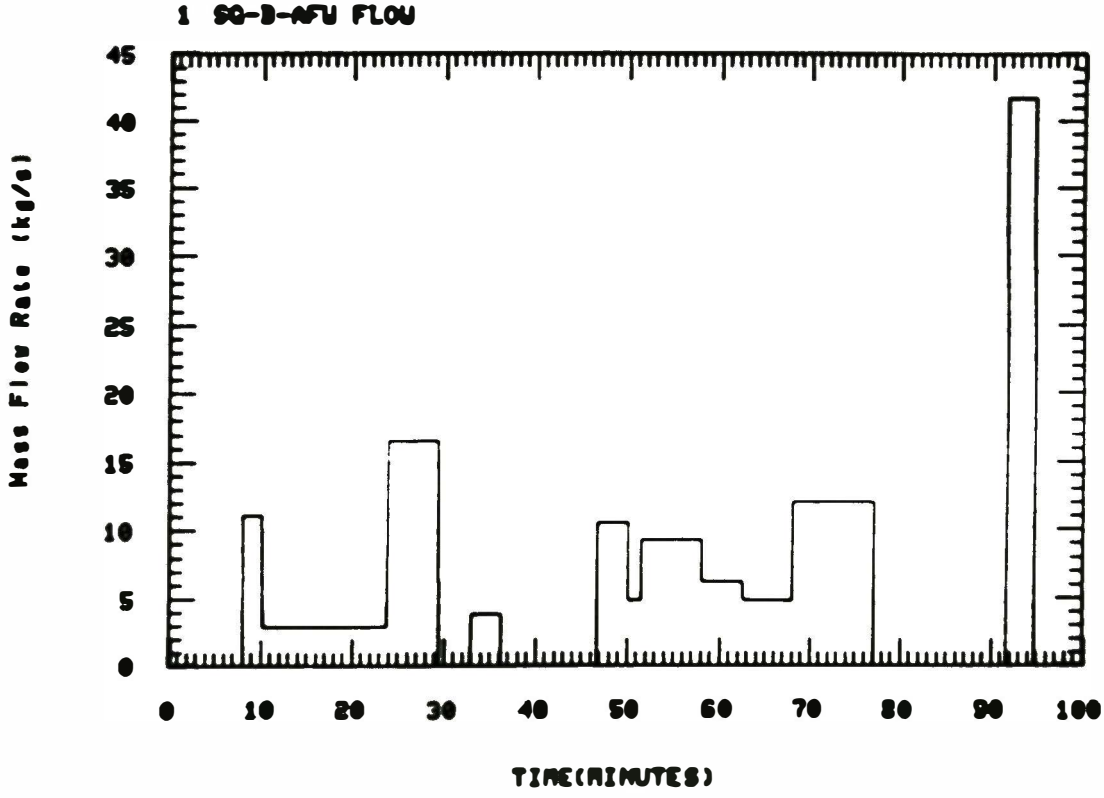

Figure 13. B-loop OTSG estimated AFW injection rates.

filling the A-loop OTSG. It is probable that in doing this fill, the operators briefly opened the wrong valves, thus injecting liquid into the B-loop OTSG rather than the A-loop OTSG. This is supported by the fact that the B-loop OTSG mass stopped increasing at 94.6 minutes, and the A-loop OTSG mass began increasing at the same time. Following the B-loop OTSG AFW injection, the secondary mass continued to decrease until 103 minutes. During the time period of 103-152 minutes the B-loop OTSG mass remained fairly constant (there was a very slight increase corresponding to an injection rate of 0.1 kg/s). It is apparent that the operators finally managed to isolate the B-loop OTSG during this period.

Following the period of the B-loop OTSG isolation, the operators began filling the steam generator up to a level of 60% over the next 40 minutes. At 174 minutes the 2B main reactor coolant pump was restarted. This resulted in a several minute period of significantly increased heat transfer in the B-loop OTSG, which resulted in a large steam generation and decrease in secondary mass. The AFW injection was apparently decreased several times until it was finally shut off (mostly) at 191 minutes (the AFW pump EF-P-2A was stopped at 190.5 minutes according to the alarm printer). The operators had closed the B-loop turbine bypass isolation valve (EF-V15B) at 183.7 minutes (verified on the alarm printer), and supposedly closed the AFW injection valves (EF-V11B and EF-V12B) and the cross connect valve (EF-V5B). However, the secondary mass continued to slowly increase (at rates of .03-.4 kg/s) until after 300 minutes. This occurred during the period of 191-215 minutes, in which no AFW pumps were running. The only explanation is that the condensate pumps were aligned to provide liquid from the condenser hot well, and provided sufficient discharge pressure to slow the increase level in the B-loop OTSG at a secondary pressure of about 2.8 MPa (400 psig).

The results from adding together the AFW injection and steaming rates presented in Figures 11 and 12, and integrating,[a] are compared to the total B-loop OTSG secondary mass in Figure 14. As expected the two data sets compare very well.

---

a. An initial OTSG secondary mass of 19,015 kg was used. The actual, unfiltered, initial mass was 23,780 kg. (This includes the mass of steam in the steam lines of about 3200 kg.)

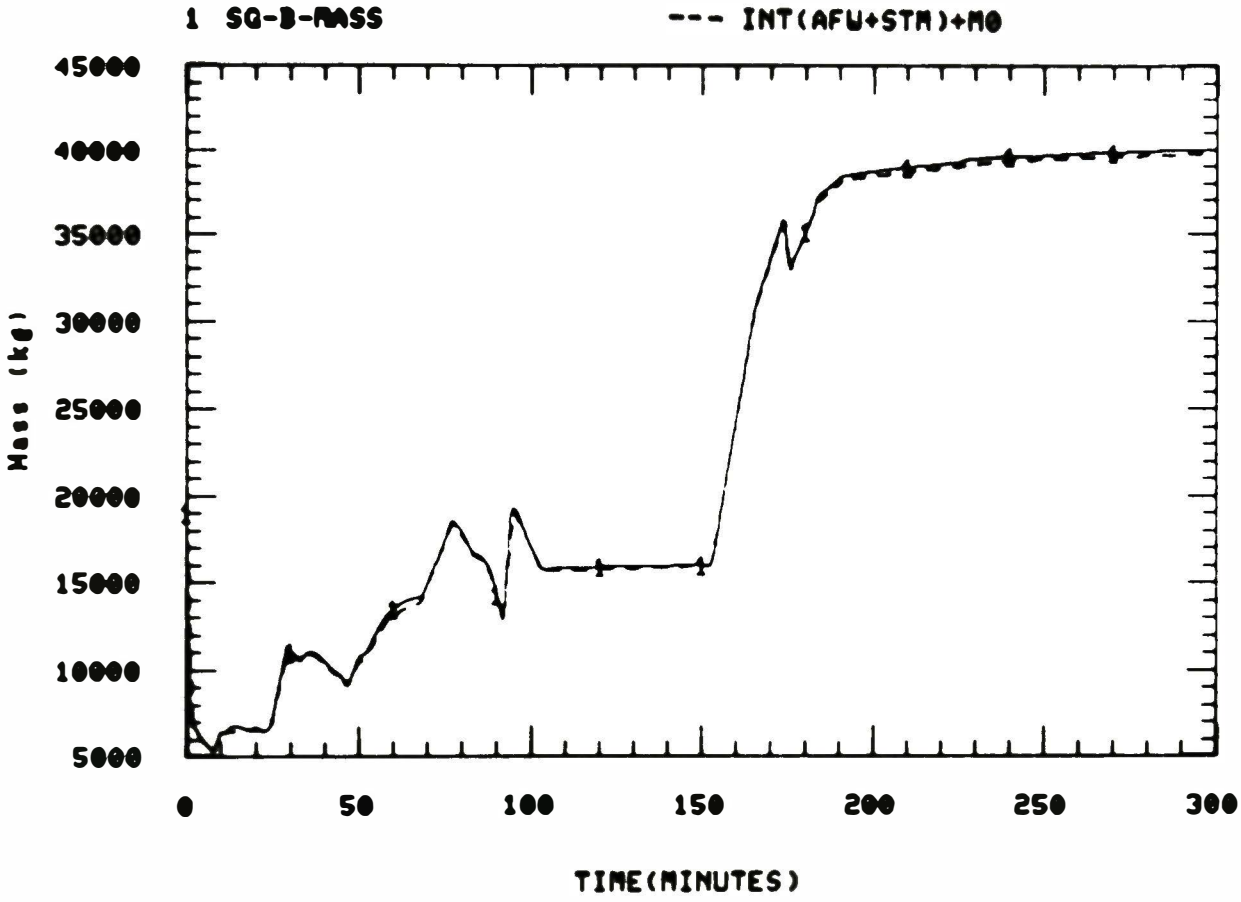

Figure 14. B-loop UTSG comparison of integrated rates and total mass.

4.3. Energy Transfer Rates[a]

The integrated energy transfer rates from the primary to the secondary calculated from Equation (7) are compared to the integrated decay energy from the core in Figure 15. Also shown is the sum of the total energy transferred from the primary into both secondaries. During the first few minutes all of the cores energy was transferred to the secondaries. However, after the first 1.5 minutes the secondaries both boiled dry and energy removal temporarily stopped. Although energy continued to be removed from the primary by the OTSGs, particularly during the first 100 minutes, the total energy removed was much less than the total energy generated in the core. By 300 minutes the steam generators had only removed about 45% of the energy that had been generated in the core (not accounting for oxidation in the core). During the first 100 minutes the amount of energy removed by each steam generator was about the same. After 100 minutes little energy was removed by the B-loop OTSG, except during the 2B RCP transient at 174 minutes.

The integrated energy transfer rates from the primary to the secondary are also compared to the integrated decay energy from the core in Figure 16 for the first 139 minutes of the accident, while the PORV block valve was open. Also shown for comparison is an estimate of the energy flow out the PORV. It is apparent from this figure that the energy transfer during the first 139 minutes was dominated by the energy flow out the PORV. The mass flow rate out the PORV, upon which this analysis was based, is shown in Figure 17 in comparison to the all liquid and all steam flow rates out the PORV (from Reference 6). The energy flow rates during periods of all liquid or two-phase flows out the PORV (the high mass flow rate periods) account for most of the energy loss from the system through the PORV. Since the integrated energy flow out of the PORV exceeds the integrated decay energy released from the core after 75 minutes there obviously is a problem in the estimated PORV flow rates. It should be noted that the energy transfer from the primary system by letdown and makeup flows is not

---

a. This presentation is preliminary in nature, and will be expanded upon in a subsequent analysis report.

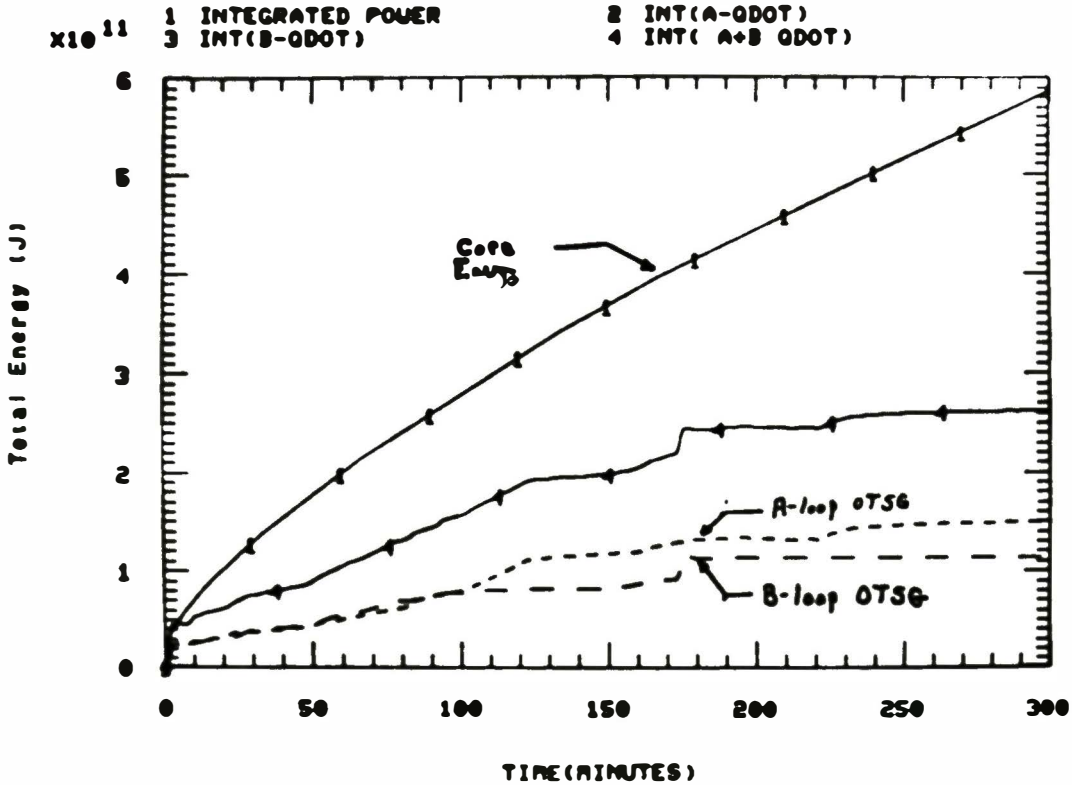

Figure 15. Comparison of A and B OTSG integrated heat transfer, with integrated core decay energy.

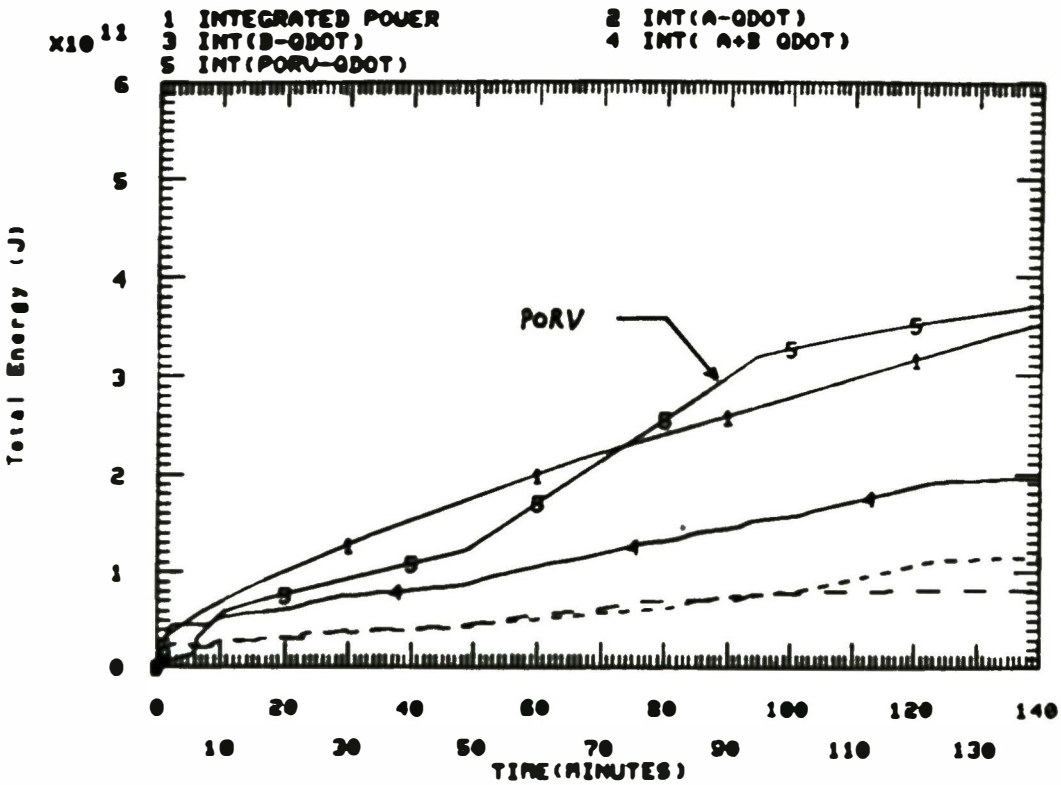

Figure 16. Comparison of A and B OTSG heat transfer, core decay energy, and PORV energy transfer - integrated rates.

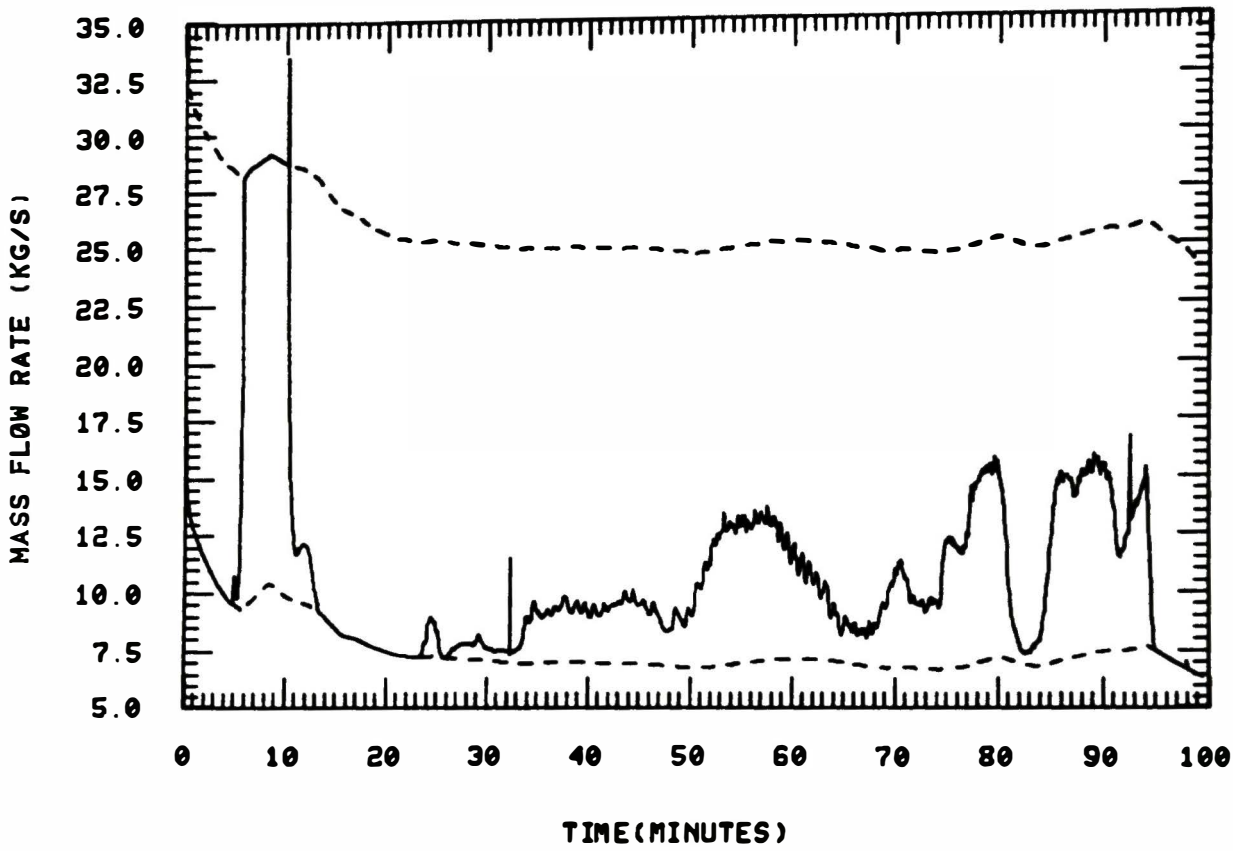

Figure 17. Comparison of the best estimate PORV critical flow rate, with the all steam and all liquid critical flow rates.

included in Figure 16, and should be for a complete energy balance of the system, along with stored energy terms.[a] However, this figure is included to provide a relative comparison of the total OTSG heat transfer to the losses out the PORV and the core decay energy.

---

a. The initial fluid energy in the primary system ($h_f \cdot M_{prim}$) was about 3×10^{11} J. An analysis utilizing the reported heat transfer rates for a system analysis would need to include this initial fluid energy. In addition, structural heat capacity and the heat capacity of the core would need to be considered.

5. CONCLUSIONS

The estimated AFW flow rates, based upon a secondary side mass balance, for both TMI-2 OTSGs have been presented. With the exception of the initial injection period (8-24 minutes) the presented flow rates are reasonable. During the initial injection period the presented flow rates are probably less than 30% of the actual injection rates. However, a better estimate is not possible from this analysis technique. The integrated steaming and injection rates compare well with the total secondary mass, from which they were derived.

The integrated primary to secondary heat transfer rates, based upon the secondary mass and energy balance, have been presented and compared to the integrated decay energy from the core. The resulting integrated energies are reasonable, and compare favorably for each OTSG. Comparison to the current estimate of energy flow out the PORV, indicates that energy removal from the primary system was dominated by the flow out of the PORV during the first 139 minutes. The heat transfer rates which have been presented are the minimum rates which would be expected to have occurred, as a result of the analysis technique used.

There are several possible combinations of secondary conditions to use as boundary conditions in a thermal-hydraulic code analysis of the accident. One possibility is to use the secondary level, in combination with the secondary pressure, and a control scheme to adjust the AFW flow rate to maintain the measured level, and a second control to adjust the steaming rate to match the secondary pressure. This method would result in an AFW flow rate which was specific to the code and modeling method used. A second possibility is to use the reported AFW flow rates, and control the steaming rate to maintain the measured secondary pressure. This method would result in a minimum heat transfer rate (as a result of the AFW injection being the minimum flow rate which would match the secondary level changes). A final possibility would be to use the heat transfer rates presented in this report as a boundary condition, and ignore the other secondary parameters. Again this would result in the minimum heat transfer

rate. In addition, the specified heat transfer rate is for the entire steam generator, thus precluding fine nodalization and modeling of the heat transfer distribution. Obviously each technique has its limitations. Choice of the boundary condition to use would depend on the objectives of the analysis.

6. REFERENCES

1. J. L. Anderson, TMI-2 Once Through Steam Generator - Secondary Level Analysis, EGG-TMI-7359, January, 1987.

2. J. L. Anderson, "Data Qualification - System Pressure," letter JA-16-86 to D. W. Golden, dated August 26, 1986.

3. T. L. Van Witbeck and J. Putman, Three Mile Island Unit II - Annotated Sequence of Events - March 28, 1979, GPU Nuclear Technical Data Report # 044, March 5, 1981.

4. M. Rogovin, G. T. Frampton, Jr., Three Mile Island--A Report to the Commissioners and to the Publics, U.S. NRC Special Inquiry Group, NUREG/CR-1250, Vol. II, January 1980.

5. Analysis of the Three Mile Island--Unit 2 Accident, Nuclear Safety Analysis Center, NSAC-80-1, revised NSAC-1, March 1980.

6. J. L. Anderson, "PORV Critical Flowrate Analysis," letter JA-4-86 to S. R. Behling, dated March 31, 1986.

B